STATE OF CALIFORNIA
GOVERNOR'S OFFICE *of* PLANNING AND RESEARCH

EDMUND G. BROWN JR.
GOVERNOR

KEN ALEX
DIRECTOR

Plug-In Electric Vehicles: Universal Charging Access Guidelines and Best Practices

These draft guidelines have been developed in conjunction with the Division of the State Architect (DSA) to assist the Governor's Office of Planning and Research with physical accessibility standards and design guidelines for the installation of plug-in electric vehicle charging stations throughout California. This initiative supports the Governor's Zero Emission Vehicle Executive Order, B-16-2012, which establishes a target of 1.5 million ZEVs in California by 2025.

These guidelines are intended to supersede and expand upon the current DSA "Interim Disabled Access Guidelines for Electric Vehicle Charging Stations 97-03", dated 5 June 1997. While 97-03 is a policy statement and only applicable to facilities under DSA's regulatory jurisdiction, it is possible that these voluntary 2013 guidelines will eventually become regulations within *California Building Code Chapter 11B Accessibility to Public Buildings, Public Accommodations, Commercial Buildings and Public Housing*.

For clarity and usability, the guidelines and any subsequent regulations should reflect the format and organization of the California Building Code. The 2013 Chapter 11B accessibility provisions use the Americans with Disabilities Act Guidelines as their model code with amendments to implement more stringent California specific requirements. These draft guidelines use the same format and are organized with separate scoping and technical provisions. The designation EVG (for Electric Vehicle Guidelines) is used as a prefix for the guideline provisions and the prefix 11B is used before sections from the 2013 California Building Code's accessibility provisions. These Guidelines are focused on physical accessibility standards and information about Section 508 of the Rehabilitation Act for Self-Contained Closed System Products will be provided in future guidance.

The guidelines address accessible plug-in electric vehicle charging stations on both public and private sites and within public rights of way. Making charging stations within public rights-of-way fully accessible can be challenging, as illustrated by the examples in the Plug-in Electric Vehicle Collaborative's "Accessibility and Signage for Plug-in Electric Vehicle Charging Infrastructure Report and Recommendations" of May 2012. Similar provisions from the proposed federal Accessibility Guidelines for Pedestrian Facilities in the Public Right-of-Way related to parking have been adapted as the basis for on-street installations. Signage and identification of the accessible electric vehicle charging stations is raised but not yet fully resolved in this public draft.

Dennis J. Corelis, Deputy State Architect
Division of the State Architect

Table of Contents

Guidelines for the Provision of Electric Vehicle Charging Stations 3

Electric Vehicle Charging Stations (EVG-250) 3

On-Site Electric Vehicle Charging Stations (EVG-812) 8

On-Street Electric Vehicle Charging Stations (EVG-813).....12

Electric Vehicle Charging Station Equipment (EVG-814) 15

Related 2013 CA Building Code Chapter 11B Accessibility Regulations.....17

Path of Travel Provisions for Alterations 17

Reference from EVG-814.1.2 Electric Vehicle Charging Stations
Pedestals and Pay Stations 21

Reference from 11B-309 Operable Parts to 11B-305 Clear
Floor or Ground Space.....21

Reference from 11B-305 Clear Floor or Ground Space to
11B-302 Floor or Ground Surfaces 23

Reference from 11B-707 Automatic Teller Machine,
and Fare Machines and Point-of-Sale Devices 23

Guidelines for the Provision of Electric Vehicle Charging Stations

The following scoping sections of these guidelines are designed to present best practices for electric vehicle charging station accessibility and eventually may become part of the California Building Code's Chapter 11B Division 2: Scoping Requirements.

ADVISORY: EVG-250 Electric Vehicle Charging Stations. A reasonable portion of Electric Vehicle Charging Stations are required to be accessible. If provided by a state or local government on public property or on-street within the public right of way, vehicle charging is considered a program or service that must be accessible to and useable by individuals with disabilities. Accessibility covers not just the physical dimensions of the charging station, and operable parts of the device, but also the functionality of the 'self-contained, closed product' charging system. If provided at privately owned or operated public accommodations they must also be accessible as a service provided to the general public.

EVG-250 Electric Vehicle Charging Stations

ADVISORY: EVG-250.1 General. While there is no positive requirement to provide electric vehicle charging stations, when they are provided a portion of them should be accessible. When co-located with parking spaces, electric vehicle charging is considered the primary function of these stations, not parking. Accessible electric vehicle charging stations are not to be reserved exclusively for the use of persons with disabilities. They should not be identified with signage that would mistakenly indicate their use is only for vehicles with placards or license plates for individuals with disabilities.

EVG-250.1 General

Where provided, electric vehicle charging stations shall comply with EVG-250.

EXCEPTION: Restricted Electric Vehicle Charging Stations not available to the general public and intended for use by a designated vehicle or driver, such as public or private fleet vehicles, vehicles assigned to an employee or by an electric vehicle owner at home may but shall not be required to comply with EVG-250 and EVG-812.

ADVISORY: EVG-250.1 General. Existing conditions, terrain, electric infrastructure and other factors dictate that not every electric vehicle charging station can be fully accessible. With electric vehicle charging stations being functionally similar to and usually integrated with parking, the ratios of accessible to standard electric vehicle charging stations in these guidelines are the same as those for accessible to standard parking in the 2010 ADA standards and the 2013 California Building Code. The numbers of required accessible electric vehicle charging stations for both on-site and public rights-of-way locations are shown in Tables EVG-250.2 On-site Electric Vehicle Charging Stations and EVG-250.3 On-street Electric Vehicle Charging Stations.

EVG-250.2 Minimum Number for On-site Locations
On publically owned or privately owned sites electric vehicle charging stations complying with EVG-812 shall be provided in accordance with Table EVG-250.2.

Table EVG-250.2 On-Site Electric Vehicle Charging Stations

Total Number of Electric Vehicle Charging Stations Provided at a Site	Minimum Number of Required Physically Accessible Electric Vehicle Charging Stations
1 to 25	1
26 to 50	2
51 to 75	3
76 to 100	4
101 and over	4, plus 2 for each 100, or fraction thereof, over 100

EVG-250.2.1 Minimum Number for Residential Facilities
Electric vehicle charging stations to serve residential facilities and sites shall comply with EVG-250.2.1.

EVG-250.2.1.1 Electric Vehicle Charging Stations for Residents
Where at least one parking space is provided for each residential dwelling unit and electric vehicle charging services are provided in conjunction with that parking, five percent, but no less than one, of the electric vehicle charging stations provided shall comply with EVG-812.

EVG-250.2.1.2 Additional Electric Vehicle Charging Stations for Residents
Where additional parking spaces beyond one for each residential dwelling unit is provided and electric vehicle charging services are provided in conjunction with that parking, two percent of the additional parking spaces, but no fewer than one, of the additional electric vehicle charging stations provided shall comply with EVG-812.

EVG-250.2.1.3 Electric Vehicle Charging Stations for Guests, Employees and Other Non-Residents
Where parking spaces are provided for persons other than residents and electric vehicle charging services are provided in conjunction with that parking, electric vehicle charging stations for guests, employees and other non-residents shall be provided in accordance with Table EVG-250.2 and shall comply with EVG-812.

EVG-250.3 Minimum Number for On-Street Locations
Within the public right-of-way of a state or local government jurisdiction on-street electric vehicle charging stations complying with EVG-812 shall be provided in accordance with Table EVG-250.3.

Table EVG-250.3 On-Street Electric Vehicle Charging Stations

Total Number of Electric Vehicle Charging Stations Provided within a Jurisdiction's Public Right of Way	Minimum Number of Required Physically Accessible Electric Vehicle Charging Stations
1 to 25	1
26 to 50	2
51 to 75	3
76 to 100	4
101 and over	4, plus 2 for each 100, or fraction thereof, over 100

EVG-250.4 Electric Vehicle Charging Stations for Vans. Reserved.

ADVISORY: EVG-250.4 Electric Vehicle Charging Stations for Vans. The guidelines do not include provisions for van accessible electric vehicle charging stations. As of the date of these guidelines there are no plug-in electric vans being manufactured and providers of electric plug-in vehicle conversions indicate that van style vehicles are not currently available due to technical and cost factors. When future developments make electric plug-in vans feasible, provisions for van accessible electric vehicle charging stations can be included in the guidelines.

EVG-250.5 Locations

Electric Vehicle Charging Stations shall be located in compliance with EVG-250.5.

ADVISORY: EVG-250.5 Location. For new construction, accessible electric vehicle charging stations should be close to a major facility, public way or accessible route on the site, with 200 feet recommended as a maximum distance. However, electric vehicle charging stations need not be provided immediately adjacent to the facility since charging services, not parking, is their primary purpose. For installations at existing sites and locations, the accessible electric vehicle charging stations may not be located in close proximity to other services due to technical factors such as the availability of electric power or terrain, but they should be on an accessible route to the maximum extent feasible.

EVG-250.5.1 On-Site Locations

Electric vehicle charging stations on public and private sites shall be dispersed within each separate type of parking facility providing electric vehicle charging to the maximum extent feasible.

EVG-250.5.1.1 Proximity to Buildings, Facilities or Sites Served

Electric vehicle charging stations complying with EVG-812 that serve a particular building, facility or site shall be located in close proximity to the facility, public way or major circulation path on the site.

EVG-250.5.1.2 Proximity to Accessible Routes
Electric vehicle charging stations complying with EVG-812 that serve a particular building, facility or site shall be on an accessible route to an entrance complying with 11B-206.4 of the current edition of the California Building Code. Electric vehicle charging stations that do not serve a particular building or facility shall be on an accessible route to an accessible pedestrian entrance to the functional area within which they are located.

ADVISORY: EVG-250.5.2 On-Street Locations. Provision of fully accessible on-street electric vehicle charging stations within the public right of way can be very difficult due to constraints posed by terrain, available right of way and other factors. The technical requirements for accessible parking, when applied electric vehicle charging stations, can be in direct conflict with roadway and sidewalk grades, right-of–way widths, and functional requirements for curbs, gutters and other right of way improvements. While many of these issues can be addressed during new construction or re-construction of the public improvements, solutions providing full accessibility may not be possible. EVG-250.5.2 allows a public entity to provide accessible electric vehicle charging on a programmatic basis. This involves using additional on-site accessible electric vehicle charging stations to meet the combined requirements for the number of both on-street and on-site locations within the public entity's jurisdiction.

EVG-250.5.2 On-Street Locations Within a Public Right-of-Way
The required total number of electric vehicle charging stations complying with EVG-250.2 and EVG-250.3 may be provided on a combined basis using both on-site locations and on-street locations within a public right-of-way owned or controlled by a state or local governmental jurisdiction. On-street **e**lectric vehicle charging stations within the public right of way shall be integrated with on street parking to the maximum extent feasible.

EVG-250.5.3 Accessible Route Between Vehicle Space and Charging Equipment
An accessible route complying with the California Building Code Chapter 11B Division 4 Accessible Routes shall connect the electric vehicle charging station vehicle space to the electric vehicle charging equipment.

EVG-250.6 Electric Vehicle Charging Stations at Existing Facilities

Alterations solely for the purpose of installing electric vehicle charging stations shall be limited to the actual scope of work of the project and shall not be required to comply with section 11B-202.4 of the current edition of the California Building Code.

> **EXCEPTION:** Alterations solely for the purpose of installing electric vehicle charging stations at sites where vehicle parking or storage is the sole and primary use of the facility shall comply with the 2013 California Building Code section 11B-202.4 Path of Travel Requirements in Alterations, Additions and Structural Repairs to the maximum extent feasible. The cost of compliance with 11B-202.4 shall be limited to twenty percent of the cost of the work directly associated with the installation of the electric vehicle charging equipment.

> **ADVISORY:** EVG-250.6 Electric Vehicle Charging Stations at Existing Facilities. The majority of electric vehicle charging stations being installed in the foreseeable future will occur at existing on-site or on-street parking facilities where the source of electric power, location of accessible parking, natural terrain, landscaping and other features are existing. Under the California Building Code these projects would be considered alterations. Alteration projects generally require accessibility improvements, if needed to comply with current requirements, to certain "path of travel" elements serving the area of alteration. The California Building Code provides exceptions to the "path of travel" upgrade requirements for projects that do not affect the usability or accessibility of the facility. It also recognizes the inherent difficulty in altering certain existing facilities for full compliance with the accessibility requirements through provisions for situations where strict compliance is technically infeasible.

> EVCS installations at existing facilities fall into three categories:

1. Within an existing public right-of-way – With no specific "path of travel" elements serving the area being altered there would be no accessibility upgrades outside the area of work.

2. On building and facility sites where parking / vehicle storage is incidental to the primary function – Under the federal 2010 ADA Standards these projects would be alterations not affecting a primary function area and "path of travel" upgrades would not be required. This is the approach used in the prior DSA Access Policy Statement 97-03 and is most probably based upon classification of electric vehicle charging stations as electrical projects not involving the placement of receptacles or switches. These proposed guidelines continue the same approach as the prior DSA policy.

3. Installations of electric vehicle charging stations at sites where vehicle parking or storage is the sole or primary use of the facility are alterations affecting the usability of or access to a primary function area. The 2010 ADA Standards require that, to the maximum extent feasible, the path of travel to the altered area, including restrooms, telephones, and drinking

fountains, is readily accessible to and usable by individuals with disabilities. Additional alterations to upgrade non-compliant path of travel elements outside of the project's area of work are required, unless those alterations are disproportionate to the overall alterations in terms of cost and scope, which is defined as exceeding twenty percent (20%) of the cost of the primary alterations. When the cost of full compliance for path of travel elements would exceed twenty percent (20%), compliance is required to the greatest extent possible within the twenty percent (20%) limitation. California law prohibits the State Architect's regulations and building standards from prescribing a lesser standard of accessibility or usability than that provided by the 2010 ADA Standards. 2013 California Building Code section 11B-202.4 reflects similar requirements with the addition of signage to the designated path of travel elements. For projects with basic costs above the CBC valuation threshold of $139,964, the cost above which path of travel alterations would become disproportionate has been aligned with the federal requirements of twenty percent (20%).

The following technical sections for the electric vehicle charging station guidelines are designed to eventually be located within the California Building Code's Chapter 11B Division 8: Special Rooms, Spaces and Elements.

EVG-812 On-Site Electric Vehicle Charging Stations

EVG-812.1 General

On-site electric vehicle charging stations shall comply with EVG-812.

EVG-812.2 Electric Vehicle Charging Station Spaces

The vehicle space designated for on-site electric vehicle charging stations shall be 216 inches (5486 mm) long minimum and 108 inches (2743 mm) wide minimum and shall have an adjacent access aisle complying with EVG-812.3.

EVG-812.2.1 Vehicle Space Marking

Car and van electric vehicle charging stations shall be marked to define their width, Where Electric Vehicle Charging Stations are marked with lines, width measurements of electric vehicle charging stations and access aisles shall be made from the centerline of the markings.

EXCEPTION: Where electric vehicle charging stations or access aisles are not adjacent to another parking space or access aisle, measurements shall be permitted to include the full width of the line defining the parking space or access aisle.

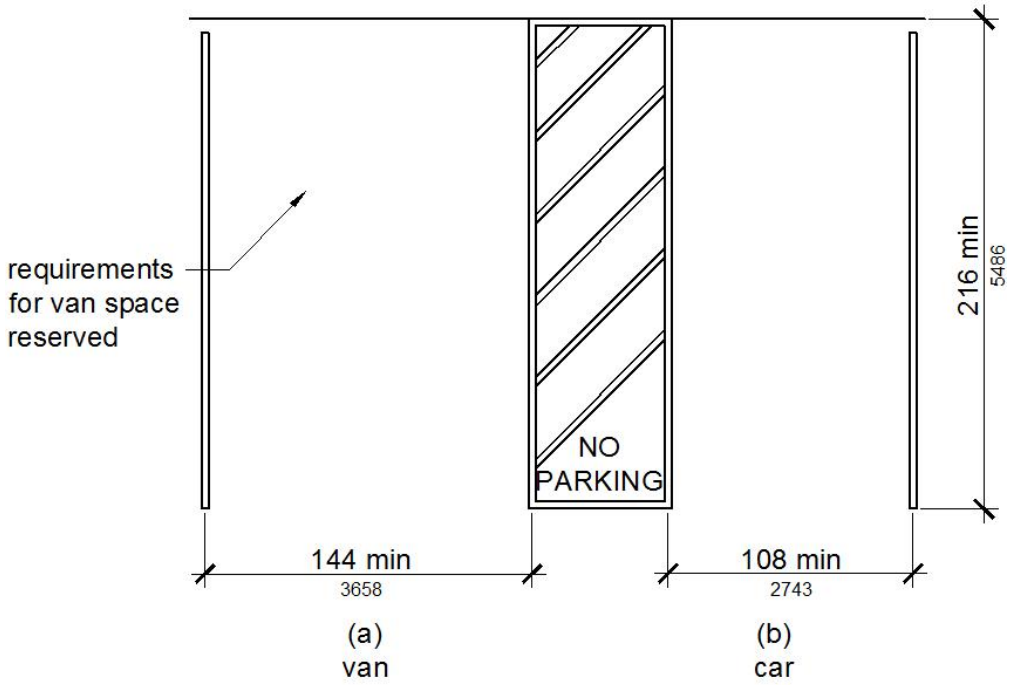

Figure EVG-812.2
On-site Electric Vehicle Charging Station Spaces Dimensions

EVG-812.2.2 Electric Vehicle Charging Only Lettering
The words "ELECTRIC VEHICLE CHARGING ONLY" or “EV CHARGING ONLY” may be painted on the surface within each charging space letters a minimum of 12 inches (305 mm) in height and located to be visible from the adjacent vehicular way.

EVG-812.3 Access Aisle

Access aisles serving vehicle spaces at on-site electric vehicle charging stations shall comply with EVG-812.3. Access aisles shall adjoin an accessible route. Two electric vehicles charging stations or one electric vehicle charging station and one accessible parking space shall be permitted to share a common access aisle.

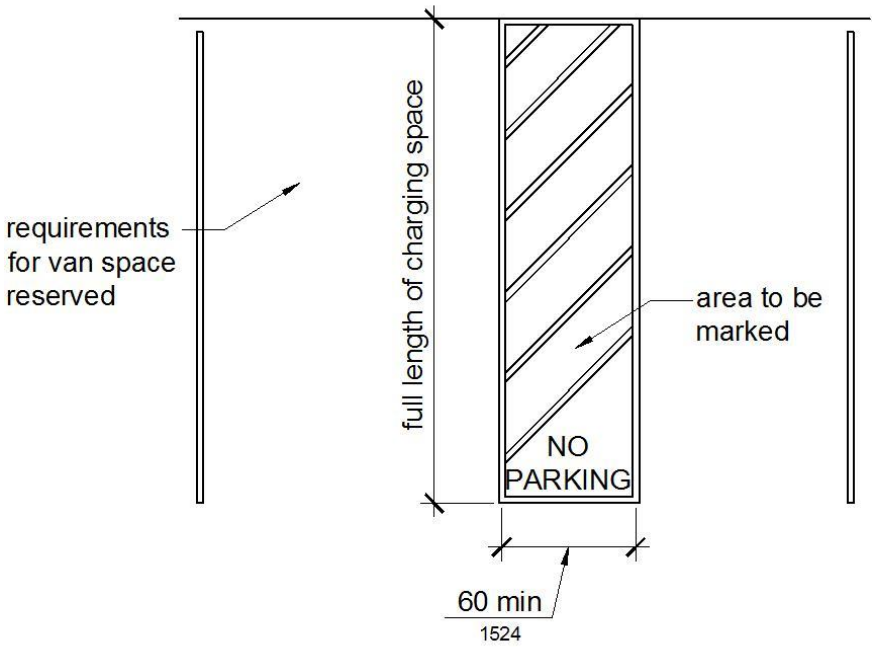

Figure EVG-812.3
Electric Vehicle Charging Station Space Access Aisle

EVG-812.3.1 Width

Access aisles serving on-site electric vehicle charging station car spaces at shall be 60 inches (1524 mm) wide minimum.

EVG-812.3.2 Length

Access aisles at on-site electric vehicle charging stations shall extend the full required length of the vehicle spaces they serve.

EVG-812.3.3 Marking

Access aisles at electric vehicle charging stations shall be marked with a painted borderline around their perimeter. The area within the borderlines shall be marked with hatched lines a maximum of 36 inches (914 mm) on center. The color of the borderlines, hatched lines, and letters shall contrast with that of the surface of the access aisle, with white being the preferred color. The blue color required for the identification of access aisles for accessible parking shall not be used.

EVG-812.3.4 No Parking Lettering

The words "NO PARKING" shall be painted on the surface within each access aisle in letters a minimum of 12 inches (305 mm) in height and located to be visible from the adjacent vehicular way.

EVG-812.3.5 Location
Access aisles at on-site electric vehicle charging station spaces shall not overlap the vehicular way and may be placed on either side of the vehicle space they serve.

EVG-812.4 Floor or Ground Surface
On-site electric vehicle charging station spaces and access aisles serving them shall comply with 11B-302 Floor and Ground Surfaces. Access aisles shall be at the same level as the electric vehicle charging station space they serve. Changes in level or slopes exceeding 1:48 are not permitted.

EVG-812.5 Vertical Clearance
On-site Electric vehicle charging station spaces, access aisles and vehicular routes serving them shall provide a vertical clearance of 98 inches (2489 mm) minimum.

EVG-812.6 Identification
On-site electric vehicle charging stations shall be identified with a sign complying with EVG-812.6 and shall not be identified as or provided with signage required for accessible parking spaces.

EVG-812.6.1 Language
Provide a sign containing language stating “Designed for Disabled Access - Use Last” in addition to the signage identifying standard electrical vehicle charging stations. Where only one electric vehicle charging station is provided the sign shall contain language stating “Designed for Disabled Access”.

EVG-812.6.2 Mounting Height
Signs shall be 60 inches (1524 mm) minimum above the finish floor or ground surface measured to the bottom of the sign and shall be the uppermost sign when co-located with “No Parking except for Electric Vehicle Charging” and “Parking Time Limit” word message signs or electric vehicle charging symbol signs.

EXCEPTION: Signs located within an accessible route shall be a minimum of 80 inches (2032 mm) above the finish floor or ground surface measured to the bottom of the lowest sign.

EVG-812.6.3 Size and Finish
Signs shall be reflectorized with a minimum area of 70 square inches (45161 mm^2).

EVG-812.6.4 Color
Signs shall be white symbols and letters on a blue background.

EVG-812.6.5 Location
Signs shall be permanently posted immediately adjacent to and visible from each space, and shall be located within the projected width of the vehicle space.

EVG-812.7 Relationship to Accessible Routes
Electric vehicle charging station vehicle spaces and access aisles shall be designed so that when occupied the required clear width of adjacent accessible routes is not obstructed.

EVG-812.7.1 Arrangement
Electric vehicle charging stations and access aisles shall be designed so that persons using them are not required to travel behind electric vehicle charging stations other than to pass behind the vehicle space in which their vehicle has been left to charge.

EXCEPTION: Electric vehicle charging stations installed in existing facilities shall comply with EVG-812.7.1 to the maximum extent feasible.

EVG-812.7.2 Accessible Route Encroachment
A curb, wheel stop, bollards or other device shall be provided if required to prevent encroachment of vehicles over the required clear width of adjacent accessible routes.

ADVISORY: EVG-813 General. EVG-250.3 specifies how many accessible electric vehicle charging stations must be provided within the public right of way of a state or local governmental entity's area of jurisdiction. Accessible electric vehicle charging stations are not parking for purposes of accessibility and should be identified by signs that do not create the impression they are reserved for vehicles displaying disabled persons license plates or placards. While accessible electric vehicle charging stations are ideally located where the street has the least crown and grade and close to key destinations, other factors, such as proximity to electric service and connections, may control their location.

EVG-813 On-Street Electric Vehicle Charging Stations

EVG-813.1 General
On-street electric vehicle charging stations shall comply with EVG-813.

EVG-813.2 Parallel Electric Vehicle Charging Stations
Parallel Electric vehicle charging station spaces shall comply with EVG-813.2.

ADVISORY: EVG-813.2 Parallel Electric Vehicle Charging Stations. The sidewalk adjacent to accessible parallel electric vehicle charging station spaces should be free of signs, street furniture, and other obstructions to permit deployment of a van side-lift or ramp or the vehicle occupant to transfer to a wheelchair or scooter. Accessible parallel electrical vehicle charging stations located at the end of the block face are usable by vans that have rear lifts and cars that have scooter platforms.

EVG-813.2.1 Parallel Electric Vehicle Charging Stations at Wide Sidewalks
Where the width of the adjacent sidewalk or available right-of-way exceeds 4.3 m (14.0 ft), an access aisle 1.5 m (5.0 ft) wide minimum shall be provided at street level the full length of the electric vehicle charging station, shall connect to a pedestrian access route and shall not encroach on the vehicular travel lane. The access aisle shall comply with EVG-812.3.1, EVG-812.3.2 and EVG-812.3.

EXCEPTION: Alterations. In alterations where the street or sidewalk adjacent to the electric vehicle charging station space is not altered, an access aisle shall not be required**,** provided the Electric Vehicle Charging Stations space is located at the end of the block face.

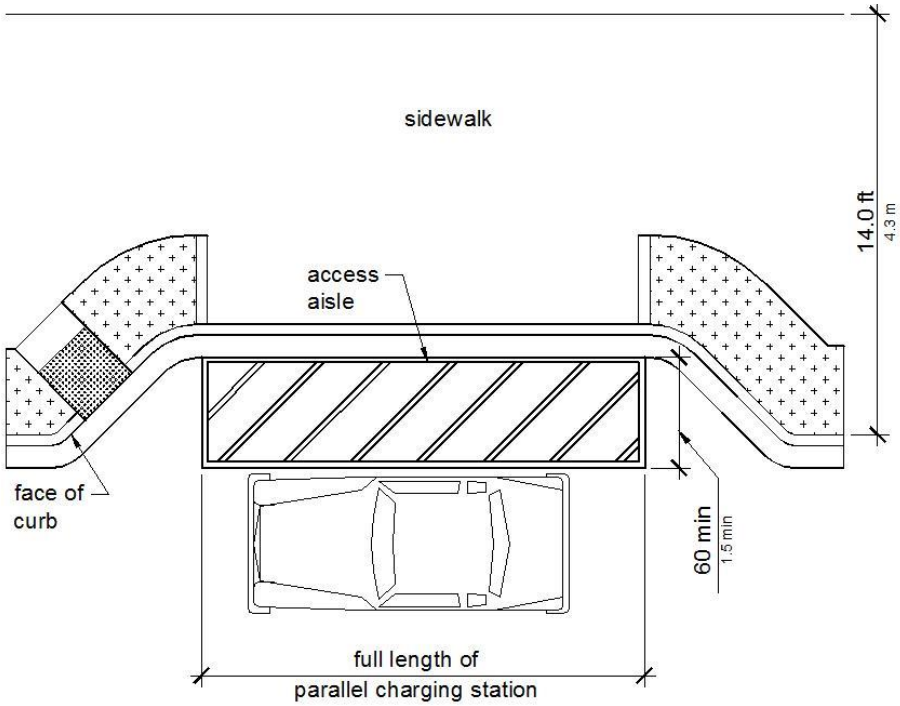

Figure 1 EVG-813.2.1 Parallel Electric Vehicle Charging Stations at Wide Sidewalks

ADVISORY: EVG-813.2.1 Wide Sidewalks. Vehicles may be positioned at the curb or at the parking lane boundary and use the space required by EVG-813.2.1 on either the driver or passenger side of the vehicle to serve as the access aisle.

EVG-813.2.2 Parallel Electric Vehicle Charging Stations at Narrow Sidewalks

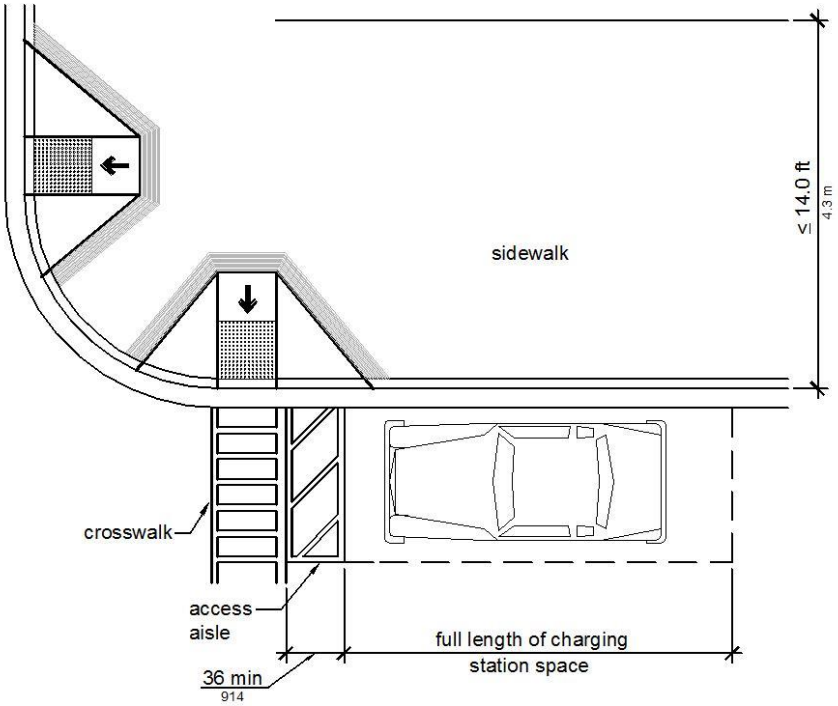

Figure EVG-813.2.2 Parallel Electric Vehicle Charging Stations at Narrow Sidewalks

An access aisle with a direct connection to the adjacent sidewalk is not required where the width of the adjacent sidewalk or the available right-of-way is less than or equal to 14.0 feet (4.3 m). When an access aisle is not provided, the Electric Vehicle Charging Stations spaces shall be located at the end of the block face to the maximum extent feasible.

> **ADVISORY:** EVG-813.2.2 Narrow Sidewalks. At parallel electric vehicle charging stations vehicle lifts or ramps can be deployed on an 8.0 feet (2.4 m) wide sidewalk if there are no obstructions.

EVG-813.3 Perpendicular or Angled Electric Vehicle Charging Stations

Where perpendicular or angled electric vehicle charging stations are provided, an access aisle 8.0 feet (2.4 m) wide minimum shall be provided at street level the full length of the electric vehicle charging station space and shall connect to a pedestrian access route. The access aisle shall comply with EVG-812.3 and shall be marked so as to discourage parking in the access aisle. Two electric vehicles charging stations or one electric vehicle charging stations and one accessible parking space shall be permitted to share a common access aisle.

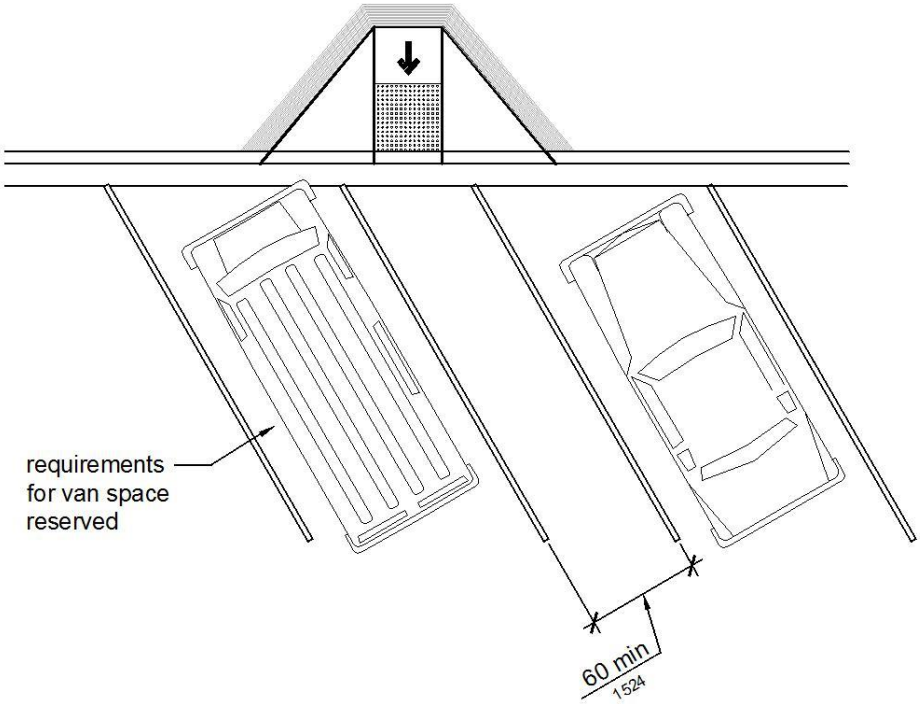

Figure EVG-813.3 Perpendicular or Angled Electric Vehicle Charging Stations

> **ADVISORY:** EVG-813.3 Perpendicular or Angled Electric Vehicle Charging Stations Spaces. Perpendicular and angled parking spaces permit the deployment of a van side-lift or ramp.

EVG-813.4 Curb Ramps or Blended Transitions

Curb ramps or blended transitions shall connect the access aisle to the pedestrian access route. Curb ramps shall not be located within the access aisle.

> **ADVISORY:** EVG-813.4 Curb Ramps or Blended Transitions. At parallel electric vehicle charging stations spaces, curb ramps and blended transitions should be located so that a van side-lift or ramp can be deployed to the sidewalk and the vehicle occupant can transfer to a wheelchair or scooter. Electric vehicle charging station spaces at the end of the block face can be served by curb ramps or blended transitions at the pedestrian street crossing.

EVG-813.5 Marking

On-street electric vehicle charging station spaces may be marked with Electric Vehicle Charging Only Lettering in compliance with EVG-812.2.2 Electric Vehicle Charging Only Lettering.

EVG-814 Electric Vehicle Charging Station Equipment

EVG-814.1 Electric Vehicle Charging Station Equipment

Equipment pedestals and pay stations that serve electric vehicle charging stations shall comply with EVG-814.1.

EVG-814.1.1 Location
Equipment pedestals and pay stations shall comply with EVG-814.1.1.

EVG-814.1.1.1 Parallel Locations
At parallel electric vehicle charging station spaces, equipment pedestals and pay stations shall be on the immediately adjacent sidewalk or ground surface and located 36 inches maximum from the head end or foot end of the projected length of the space.

EVG-814.1.1.2 Perpendicular or Angled Locations
At perpendicular or angled Electric Vehicle Charging Station spaces, equipment pedestals and pay stations shall be located on the immediately adjacent sidewalk or ground surface at the head end within the projected width of the electric vehicle charging station space.

EXCEPTION: For alterations at existing facilities when an accessible route or general circulation path is not provided adjacent to the head end of the space or access aisle, the equipment pedestal and pay station may be located within the projected width of the access aisle 36 inches maximum from the head end of the space.

ADVISORY: EVG-814.1.1 Location. Locating equipment pedestals and pay stations at the head or foot of the electric vehicle charging station permits deployment of a van side-lift or ramp or the vehicle occupant to transfer to a wheelchair or scooter.

EVG-814.1.2 Charging Station Equipment Operable Parts
Operable parts and charging cord stowage locations shall comply with 11B-309 Operable Parts.

EVG-814.2 Displays and Information
Displays and information shall be visible from a point located 3.3 feet (1.0 m) maximum above the center of the clear floor or ground space in front of the equipment pedestal and pay station.

EVG-814.3. Charging Station Equipment Clear Floor Space
Clear floor space at electric vehicle charging stations shall comply with 11B-305 Clear Floor Space and shall be centered on the display and information side of the electric vehicle charging station equipment.

Related 2013 California Building Code
Chapter 11B Accessibility Regulations

2013 CBC Path of Travel Provisions for Alterations

11B-202.4 Path of Travel Requirements in Alterations, Additions and Structural Repairs
When alterations or additions are made to existing buildings or facilities, an accessible path of travel to the specific area of alteration or addition shall be provided. The primary accessible path of travel shall include:

1. A primary entrance to the building or facility,
2. Toilet and bathing facilities serving the area,
3. Drinking fountains serving the area,
4. Public telephones serving the area, and
5. Signs.

EXCEPTIONS:

1. Residential dwelling units shall comply with 11B-233.3.4.2.

2. If the following elements of a path of travel have been constructed or altered in compliance with the accessibility requirements of the 2010 California Building Code, it shall not be required to retrofit such elements to reflect the incremental changes in this code solely because of an alteration to an area served by those elements of the path of travel:

   1. A primary entrance to the building or facility,

   2. Toilet and bathing facilities serving the area,

   3. Drinking fountains serving the area,

   4. Public telephones serving the area, and

   5. Signs.

3. Additions or alterations to meet accessibility requirements consisting of one or more of the following items shall be limited to the actual scope of work of the project and shall not be required to comply with 11B-202.4:

   1. Altering one building entrance.

   2. Altering one existing toilet facility.

3. Altering existing elevators.

4. Altering existing steps.

5. Altering existing handrails.

4. Alterations solely for the purpose of barrier removal undertaken pursuant to the requirements of the Americans with Disabilities Act (Public Law 101-336, 28 C.F.R., Section 36.304) or the accessibility requirements of this code as those requirements or regulations now exist or are hereafter amended consisting of one or more of the following items shall be limited to the actual scope of work of the project and shall not be required to comply with 11B-202.4:

1. Installing ramps.

2. Making curb cuts in sidewalks and entrance.

3. Repositioning shelves.

4. Rearranging tables, chairs, vending machines, display racks, and other furniture.

5. Repositioning telephones.

6. Adding raised markings on elevator control buttons.

7. Installing flashing alarm lights.

8. Widening doors.

9. Installing offset hinges to widen doorways.

10. Eliminating a turnstile or providing an alternative accessible route.

11. Installing accessible door hardware.

12. Installing grab bars in toilet stalls.

13. Rearranging toilet partitions to increase maneuvering space.

14. Insulating lavatory pipes under sinks to prevent burns.

15. Installing a raised toilet seat.

16. Installing a full-length bathroom mirror.

17. Repositioning the paper towel dispenser in a bathroom.

18. Creating designated accessible parking spaces.

19. Removing high-pile, low-density carpeting.

5. Alterations of existing parking lots by resurfacing and/or restriping shall be limited to the actual scope of work of the project and shall not be required to comply with 11B-202.4.

6. The addition or replacement of signs and/or identification devices shall be limited to the actual scope of work of the project and shall not be required to comply with 11B-202.4.

7. Projects consisting only of heating, ventilation, air conditioning, reroofing, electrical work not involving placement of switches and receptacles, cosmetic work that does not affect items regulated by this code, such as painting, equipment not considered to be a part of the architecture of the building or area, such as computer terminals and office equipment shall not be required to comply with 11B-202.4. unless they affect the usability of the building or facility.

8. When the adjusted construction cost is less than or equal to the current valuation threshold, as defined in Chapter 2, Section 202, the cost of compliance with 11B-202.4 shall be limited to 20 percent of the adjusted construction cost of alterations, structural repairs or additions. When the cost of full compliance with 11B-202.4 would exceed 20 percent, compliance shall be provided to the greatest extent possible without exceeding 20 percent.

   When the adjusted construction cost exceeds the current valuation threshold, as defined in Chapter 2, Section 202, and the enforcing agency determines the cost of compliance with 11B-202.4 is an unreasonable hardship, as defined in Chapter 2, Section 202, full compliance with 11B-202.4 shall not be required. Compliance shall be provided by equivalent facilitation or to the greatest extent possible without creating an unreasonable hardship; but in no case shall the cost of compliance be less than 20 percent of the adjusted construction cost of alterations, structural repairs or additions. The details of the finding of unreasonable hardship shall be recorded and entered into the files of the enforcing agency and shall be subject to Chapter 1, Section 1.9.1.5, Special Conditions for Persons with Disabilities Requiring Appeals Action Ratification.

   For the purposes of this exception, the adjusted construction cost of alterations, structural repairs or additions shall not include the cost of alterations to path of travel elements required to comply with 11B-202.4.

In choosing which accessible elements to provide, priority should be given to those elements that will provide the greatest access in the following order:

1. An accessible entrance;

2. An accessible route to the altered area;

3. At least one accessible restroom for each sex;

4. Accessible telephones;

5. Accessible drinking fountains; and

6. When possible, additional accessible elements such as parking, storage and alarms.

If an area has been altered without providing an accessible path of travel to that area, and subsequent alterations of that area or a different area on the same path of travel are undertaken within three years of the original alteration, the total cost of alterations to the areas on that path of travel during the preceding three-year period shall be considered in determining whether the cost of making that path of travel accessible is disproportionate.

9. Certain types of privately funded, multistory buildings and facilities were formerly exempt from accessibility requirements above and below the first floor under this code, but as of, April 1, 1994, are no longer exempt due to more restrictive provisions in the federal Americans with Disabilities Act. In alteration projects involving buildings and facilities previously approved and built without elevators, areas above and below the ground floor are subject to the 20-percent disproportionality provisions described in Exception 8, above, even if the value of the project exceeds the valuation threshold in Exception 8. The types of buildings and facilities are:

1. Office buildings and passenger vehicle service stations of three stories or more and 3,000 or more square feet (279 m^2) per floor.

2. Offices of physicians and surgeons.

3. Shopping centers.

4. Other buildings and facilities three stories or more and 3,000 or more square feet (279 m^2) per floor if a reasonable portion of services sought and used by the public is available on the accessible level.

For the general privately funded multistory building exception applicable to new construction and alterations, see Division 11B-206.2.3, Exception 1.

The elevator exception set forth in this section does not obviate or limit in any way the obligation to comply with the other accessibility requirements in this code. For example, floors above or below the accessible ground floor must meet the requirements of this section except for elevator service. If toilet or bathing facilities are provided on a level not served by an elevator, then toilet or bathing facilities must be provided on the accessible ground floor.

2013 CBC reference from EVG-814.1.2 Electric Vehicle Charging Stations Pedestals and Pay Stations

11B-309 Operable Parts

11B-309.1 General
Operable parts shall comply with 11B-309.

11B-309.2 Clear Floor Space
A clear floor or ground space complying with 11B-305 shall be provided.

11B-309.3 Height
Operable parts shall be placed within one or more of the reach ranges specified in 11B-308.

11B-309.4 Operation
Operable parts shall be operable with one hand and shall not require tight grasping, pinching, or twisting of the wrist. The force required to activate operable parts shall be 5 pounds (22.2 N) maximum.

> **EXCEPTION:** Gas pump nozzles shall not be required to provide operable parts that have an activating force of 5 pounds (22.2 N) maximum.

Reference from 11B-309 Operable Parts to 11B-305 Clear Floor or Ground Space

11B-305 Clear Floor or Ground Space

11B-305.1 General
Clear floor or ground space shall comply with 11B-305.

11B-305.2 Floor or Ground Surfaces
Floor or ground surfaces of a clear floor or ground space shall comply with 11B-302. Changes in level are not permitted.

> **EXCEPTION:** Slopes not steeper than 1:48 shall be permitted.

11B-305.3 Size
The clear floor or ground space shall be 30 inches (762 mm) minimum by 48 inches (1219 mm) minimum.

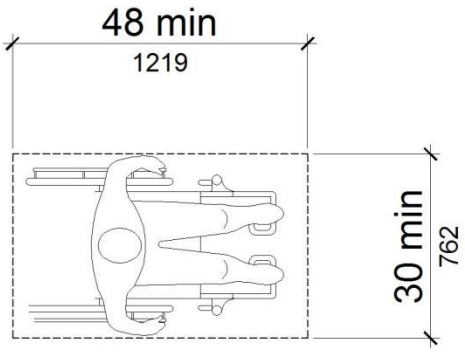

Figure 11B-305.3
Clear Floor or Ground Space

11B-305.4 Knee and Toe Clearance
Unless otherwise specified, clear floor or ground space shall be permitted to include knee and toe clearance complying with 11B-306.

11B-305.5 Position
Unless otherwise specified, clear floor or ground space shall be positioned for either forward or parallel approach to an element.

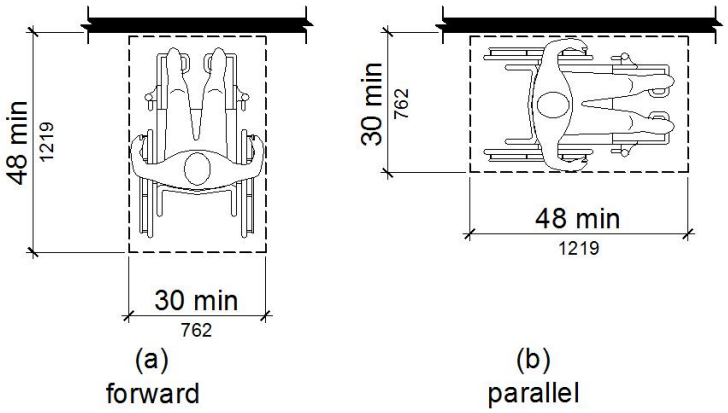

Figure 11B-305.5
Position of Clear Floor or Ground Space

11B-305.6 Approach
One full unobstructed side of the clear floor or ground space shall adjoin an accessible route or adjoin another clear floor or ground space.

Reference from 11B-305 Clear Floor or Ground Space to 11B-302 Floor or Ground Surfaces

11B-302 Floor or Ground Surfaces

11B-302.1 General
Floor and ground surfaces shall be stable, firm, and slip resistant and shall comply with 11B-302.

EXCEPTIONS: 1. Within . . .

11B-302.3 Openings
Openings in floor or ground surfaces shall not allow passage of a sphere more than ½ inch (12.7 mm) diameter except as allowed in 11B-407.4.3, 11B-409.4.3, 11B-410.4, 11B-810.5.3 and 11B-810.10. Elongated openings shall be placed so that the long dimension is perpendicular to the dominant direction of travel.

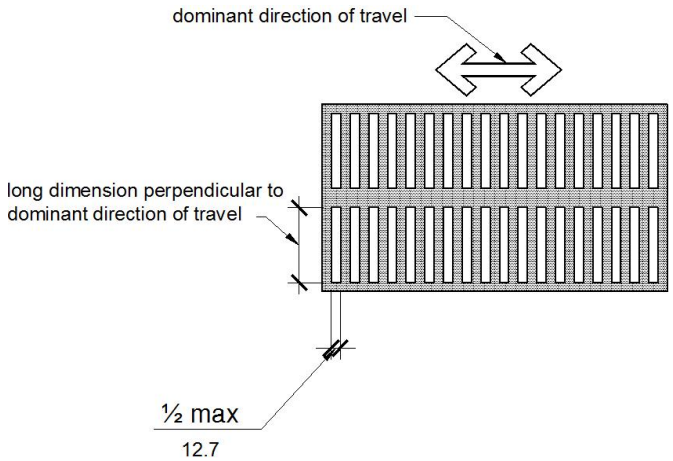

Figure 11B-302.3
Elongated Openings in Floor or Ground Surfaces

Reference from 11B-707 Automatic Teller Machine, and Fare Machines and Point-of-Sale Devices

11B-707.1 General.
Automatic teller machines and fare machines shall comply with 11B-707.